321188 D39EX_PX_22_AESS769_03_v2_D51EX_PX_22_Full 6/15/12 8:55 AM Page 1

KOMATSU®

NET HORSEPOWER
79 kW **105 HP** @ 2200 rpm

OPERATING WEIGHT
D39EX-22: 9450 kg **20,834 lb**
D39PX-22: 9890 kg **21,804 lb**

D39EX-22
D39PX-22

NOM-174-SEMARNAT-2026
Family: A323
Type: FR95861

With Hydrostatic Transmission (HST)

D39

CRAWLER DOZER



Photos may include optional equipment

321188 D39EX_PX_22_AESS769_03_v2_D51EX_PX_22_Full 6/15/12 8:55 AM Page 2

WALK-AROUND

The D39-22 is the next addition to an all new HST dozer line based on the D51-22 design concepts. Some of these concepts include Super-slant nose, large mid-mount cab, and durable construction.

All-around Visibility
- Super-slant nose design
- Cab-forward design
- Integrated ROPS/FOPS (Level 2)

Increased Productivity
- Highest HP in its class
- Electronically-controlled hydraulically-driven fan
- Rigid track frame with in-shoe final drive
- High capacity Power Angle Tilt dozer blade
- Adjustable blade pitch

Easy Operation/Increased Operator Comfort
- Hydrostatic Transmission (HST) with electronic control
- Palm Command Control System (PCCS)
- New cab damper mounting system
- Large and quiet pressurized cab (optional)

Improved Durability
- Large undercarriage components
- Heavy-plate steel used throughout
- Dozer frame with steel casting
- Strong modular design
- New heavy duty HST components

Easy Maintenance
- Electronic monitor panel with on-board diagnostics
- Rear-mount radiator with swing-up electronically-controlled hydraulically-driven fan
- Ground-level daily service checks
- KOMTRAX®



KOMTRAX

KOMTRAX equipped machines can send location, SMR and operation maps to a secure website utilizing wireless technology. Machines also relay error codes, cautions, maintenance items, fuel levels, and much more.

321188 D39EX_PX_22_AESS769_03_v2_D51EX_PX_22_Full 6/15/12 8:55 AM Page 3

D39-22

NET HORSEPOWER
79 kW **105 HP** @ 2200 rpm

OPERATING WEIGHT
D39EX-22: 9450 kg **20,834 lb**
D39PX-22: 9890 kg **21,804 lb**



Photos may include optional equipment

321188 D39EX_PX_22_AESS769_03_v2_D51EX_PX_22_Full 6/15/12 8:55 AM Page 4



Great visibility ru

Unrivaled blade visibility

Just like the D51EX/PX-22, the D39EX/PX-22 incorporates Komatsu's **super-slant nose** design. Komatsu's innovative design provides excellent blade visibility for improved machine control and increased efficiency and productivity.

321188 D39EX_PX_22_AESS769_03_v2_D51EX_PX_22_Full 6/15/12 8:55 AM Page 5



321188 D39EX_PX_22_AESS769_03_v2_D51EX_PX_22_Full 6/15/12 8:55 AM Page 6

OPERATOR COMFORT



HST with electronic control

The D39 is equipped with a Komatsu-designed Hydrostatic Transmission (HST), similar to the D51, that allows for Quick-Shift (3 speed) or variable (20 speed) selection. The HST consists of dual-path closed-circuits with two variable displacement piston pumps and two variable displacement travel motors. Hydrostatic steering eliminates steering clutches and brakes, providing smooth powerful turns. Fully electronic control provides automatic shifting and enables smooth operation. Engine speed is controlled using an electronic fuel control dial.

Comfortable ride with cab damper mounting

The D39 shares the same roomy cab as the D51 using a cab damper system that provides excellent shock and vibration absorption which conventional mounting systems are unable to match. The silicon oil filled cab damper mount helps to isolate the cab from the machine body, suppressing vibration and providing a quiet, comfortable operating environment.

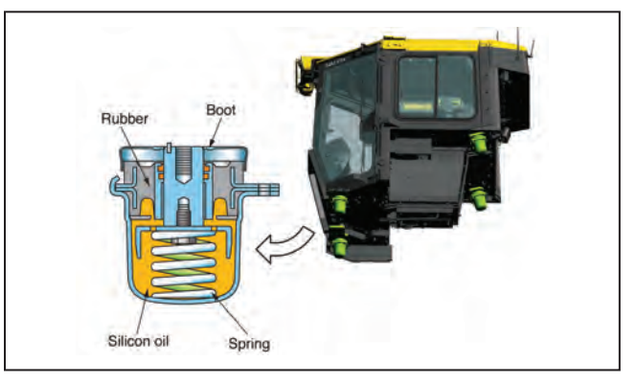

Palm command Proportional Pressure Control (PPC)

PPC-controlled palm command joystick provides blade control. Combined with the highly reliable Komatsu hydraulic system, precise control is the result.

Closed-center Load Sensing System (CLSS) hydraulic system

With CLSS hydraulics, blade lever stroke is directly proportional to blade speed, regardless of the load and travel speed. This results in superb fine controllability.

Palm Command Control System (PCCS)

The low-effort, ergonomic PCCS joystick controls all directional movements including machine travel speed as well as counter-rotation.

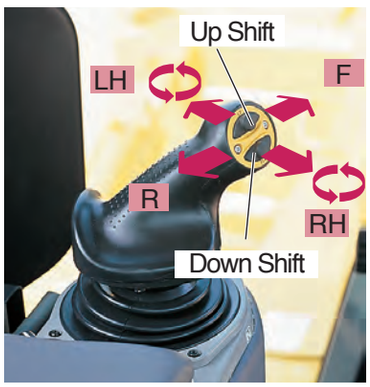

321188 D39EX_PX_22_AESS769_03_v2_D51EX_PX_22_Full 6/15/12 8:55 AM Page 7

DURABILITY FEATURES

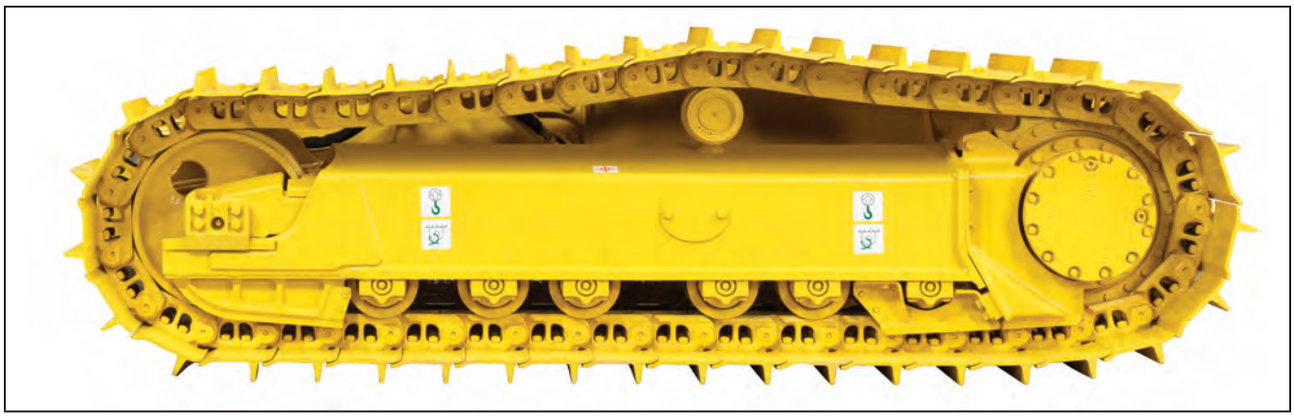

Heavy-duty undercarriage

Large links, large bushing diameters, and wide sprocket teeth extend undercarriage life.

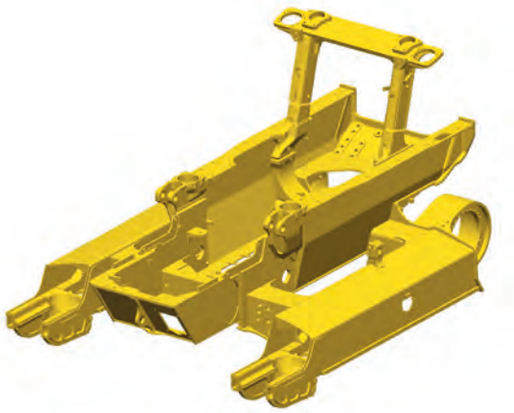

Durable and reliable main frame

Komatsu welds the track frames to the main frame with large connecting bars and weldments, providing the ideal stiffness required in a finish crawler dozer.
The track frame is made of a solid one-piece design, reducing maintenance costs compared to designs that use multiple pieces and bolt-on covers.

Modular design

Just like the D51, one of the design goals behind the creation of the D39 was to manufacture a more durable machine. This was achieved by reducing component complexity and using a strong modular design for increased serviceability and durability.

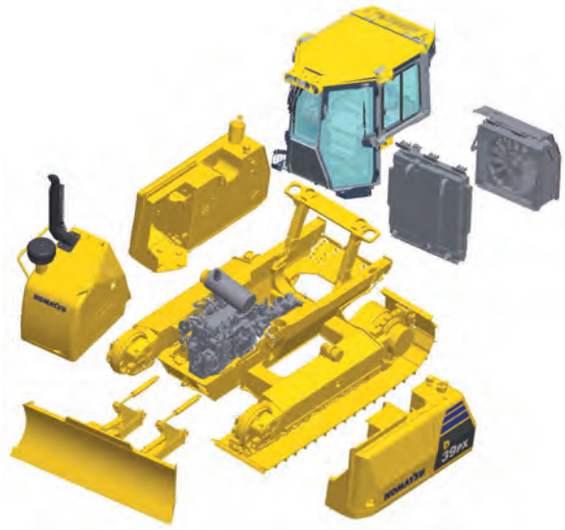

One-piece nose guard

Simplified high-rigidity structure with thicker plates reduces vibration and noise.

Strong and reliable drive train

The HST pump and drive motors have been increased in size to complement the increased engine horsepower. This provides a strong and durable drive train that is designed to last. This system utilizes a new high efficiency filter and hydraulic tank cap. The cap now has a separate breather to minimize contaminants in the system.

321188 D39EX_PX_22_AESS769_03_v2_D51EX_PX_22_Full 6/15/12 8:55 AM Page 8

PRODUCTIVITY FEATURES

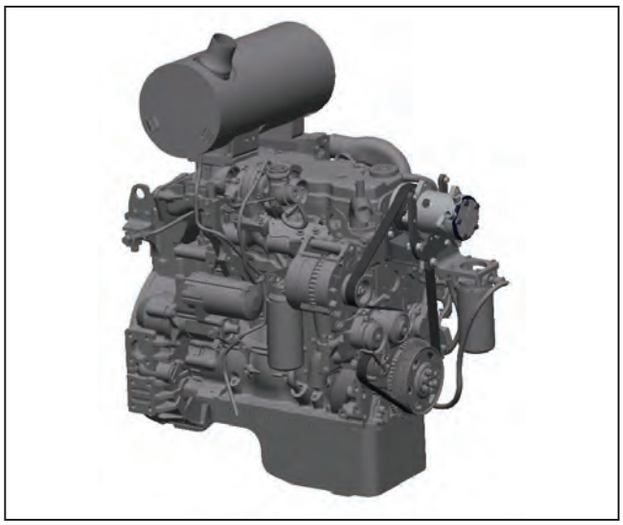

Long track-on-ground and rigid track frame

Long track-on-ground, rigid track frame improves machine final grading performance.

Adjustable pitch PAT blade

Blade pitch angle can be easily adjusted by changing the length of the pitch rod on the top of the blade. This enables maximum job efficiency in various material and ground conditions.

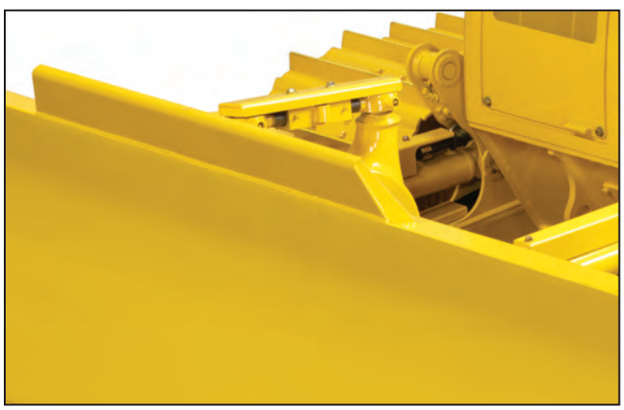

ecot3 ecology & economy - technology 3

This engine is UN R96 (EPA Tier 3, EU Stage 3A equivalent) emissions certified; "ecot3" - ecology and economy combine with Komatsu technology to create a high performance engine without sacrificing power or productivity.

Fuel efficient electronic controlled engine

The Komatsu SAA4D107E-1 engine delivers a net output of 79 kW **105 HP** at 2200 rpm. The powerful Komatsu engine incorporated into the D39-22 makes this dozer fuel efficient and the logical choice in both grading and dozing operations. The engine is turbocharged and features direct fuel injection and air-to-air aftercooling to maximize power, fuel efficiency, and emission compliance. To minimize noise and vibration, the engine is iso-mounted to the main frame.

Hydrostatic Transmission (HST) control system

The HST controller monitors engine output and work equipment/travel load. It controls HST pump and motor displacement to provide the optimum speed and drawbar pull. Power to both tracks during turns and counter-rotation makes the D39 extremely maneuverable.

Hydraulically-driven cooling fan

The engine cooling fan rotation speed and direction is electronically controlled. The fan rotation speed depends on engine coolant and hydraulic oil temperatures; the higher the temperature, the higher the fan speed. This system increases fuel efficiency, reduces operating noise levels, and requires less horsepower than a belt-driven fan. Additionally, cool ambient air is pulled in through perforations in the rear access doors adding to its cooling efficiency.

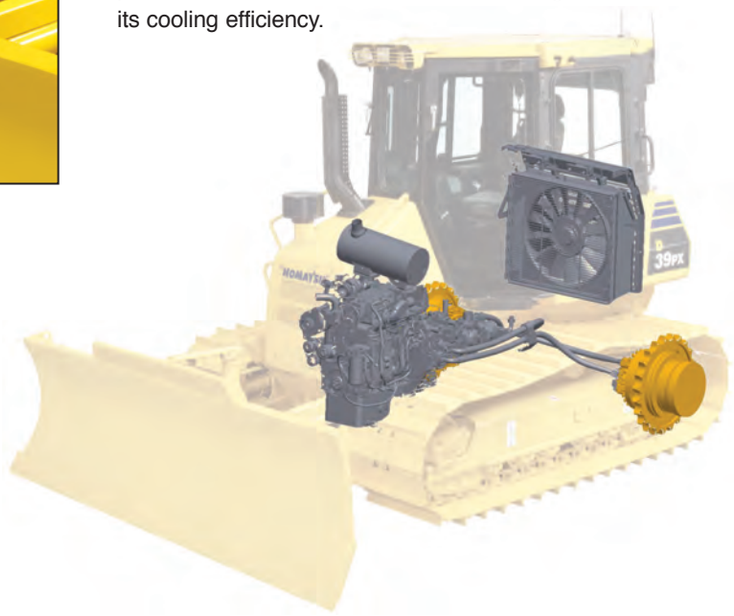

321188 D39EX_PX_22_AESS769_03_v2_D51EX_PX_22_Full 6/15/12 8:55 AM Page 9

MAINTENANCE FEATURES

Hydraulically-driven swing-up fan

The D39-22 utilizes a swing-up fan with a gas strut-assisted lift locking system to provide easy access to the (side-by-side) radiator, oil cooler, and charge air cooler. The swing-up feature makes it easier to access cooling cores. The hydraulic fan has a “cleaning” mode. The fan rotates in the reverse direction and helps to clear off objects in front of the cooling areas. The fan is protected by thick steel louvers and an additional fan screen for added durability.



New monitor with self-diagnostic function

The monitor system provides critical information about the machine. It provides operating condition status and notifies the operator with a lamp and buzzer when an abnormality occurs. In addition, fault codes are indicated to aid troubleshooting and help reduce machine downtime. Service reminders for fluids and filters are also indicated. KOMTRAX adds a valuable dimension to troubleshooting and maintenance.



Daily checks

All daily checks can be performed efficiently at ground level from the left side of the machine.



Adjustment-free parking disc brake

An adjustment-free spring-applied hydraulic-release wet parking brake is located in each final drive. Dynamic HST braking is used until the machine stops moving, then the parking brake engages, minimizing wear.

Easy engine oil drain

Changing the engine oil is easy with a strategically mounted access cover and remote drain hose. There is no need to crawl under the machine to drain the engine oil.

Towing hitch

The optional hitch extends past the track to allow maximum angle when towing.



321188 D39EX_PX_22_AESS769_03_v2_D51EX_PX_22_Full 6/15/12 8:55 AM Page 10

SPECIFICATIONS

ENGINE

Model . . . . . Komatsu SAA4D107E-1*
Type . . . . . 4-cycle, water-cooled, direct injection
Aspiration . . . . . Turbocharged, air-to-air aftercooled
Number of cylinders 4
Bore x stroke . . . . . 107 mm x 124 mm **4.21" x 4.88"**
Piston displacement . . . . . 4.46 ltr **272 in³**
Governor . . . . . All-speed, electronic
Horsepower
SAE J1995 . . . . . Gross 80 kW **107 HP**
ISO 9249 / SAE J1349 . . . . . Net 79 kW **105 HP**
Hydraulic fan at maximum speed . . . . . Net 71 kW **95 HP**
Rated rpm . . . . . 2200 rpm
Fan drive type . . . . . Hydraulic (reversible for cleaning)
Lubrication system
Method . . . . . Gear pump, force lubrication
Filter . . . . . Full-flow

*UN R96 (EPA Tier 3, EU Stage 3A equivalent).

HYDROSTATIC TRANSMISSION

Dual-path, hydrostatic transmission provides infinite speed changes up to 8.5 km/h **5.3 mph**. The variable capacity travel motors allow the operator to select the optimum speed to match specific jobs. Travel control lock lever and neutral switch.

Travel speed (quick shift mode)	Forward	Reverse
1st	0–3.4 km/h **0–2.1 mph**	0–4.1 km/h **0–2.5 mph**
2nd	0–5.6 km/h **0–3.5 mph**	0–6.5 km/h **0–4.0 mph**
3rd	0–8.5 km/h **0–5.3 mph**	0–8.5 km/h **0–5.3 mph**

Travel speed (variable mode)	Forward	Reverse
	0–8.5 km/h **0–5.3 mph**	0–8.5 km/h **0–5.3 mph**

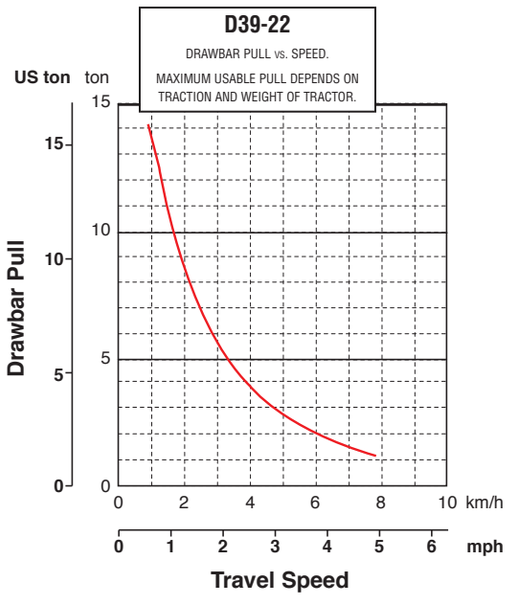

FINAL DRIVE

Two-stage planetary gear integrated into axial piston travel motors. Compact in-shoe mount reduces risk of damage by debris.

STEERING

Palm Command Control System (PCCS) joystick control for all directional movements. Pushing the joystick forward results in forward machine travel, while pulling it rearward reverses the machine. Simply tilt the joystick to the left or right to make a turn. Tilting the joystick fully to the left or right activates counter-rotation. Hydrostatic Transmission (HST) eliminates steering clutches and brakes, providing smooth powerful turns. Fully electronic control enables smooth control. The PCCS utilizes shift buttons to increase and decrease speed.

Minimum turning radius:
D39EX-22 . . . . . 2.2 m **7'3"**
D39PX-22 . . . . . 2.4 m **7'10"**

As measured by track marks on the ground at pivot turn.

UNDERCARRIAGE

Suspension . . . . . Rigid track frame
Track roller frame . . . . . Solid one-piece, thick steel, durable construction
Rollers and idlers . . . . . Lubricated track rollers

Lubricated tracks
Unique seals minimize the entry of foreign abrasive material into pin to bushing clearances to provide extended service life. Track tension is easily adjusted with a grease gun.

	D39EX-22	D39PX-22
Number of track rollers (each side)	6	6
Type of shoes (standard)	Single grouser	Single grouser
Number of shoes (each side)	39	39
Grouser height	53 mm **2.1"**	53 mm **2.1"**
Shoe width (standard)	460 mm **18.1"**	635 mm **25.0"**
Ground contact area	21710 cm² **3,365 in²**	29970 cm² **4,645 in²**
Ground pressure (with dozer, ROPS cab)	42.7 kPa 0.44 kgf/cm² **6.19 psi**	32.3 kPa 0.33 kgf/cm² **4.69 psi**
Track gauge	1650 mm **5'5"**	1790 mm **5'10"**
Length of track on ground	2360 mm **7'9"**	2360 mm **7'9"**

COOLANT AND LUBRICANT CAPACITY (REFILLING)

Coolant	23 ltr	**6.1 U.S. gal**
Fuel tank	195 ltr	**51.5 U.S. gal**
Engine oil	15 ltr	**4.0 U.S. gal**
Hydraulic tank	60 ltr	**15.9 U.S. gal**
Final drive (each side)	3.5 ltr	**0.9 U.S. gal**

OPERATING WEIGHT (APPROXIMATE)

Tractor weight:
Including ROPS cab, rated capacity of lubricant, coolant, full fuel tank, operator, and standard equipment.
D39EX-22 (ROPS cab) . . . . . 8210 kg **18,100 lb**
D39PX-22 (ROPS cab) . . . . . 8570 kg **18,894 lb**
Operating weight:
Including PAT dozer, ROPS cab, operator, standard equipment, rated capacity of lubricant, coolant, and full fuel tank.
D39EX-22 (ROPS cab) . . . . . 9450 kg **20,834 lb**
D39PX-22 (ROPS cab) . . . . . 9890 kg **21,804 lb**

321188 D39EX_PX_22_AESS769_03_v2_D51EX_PX_22_Full 6/15/12 8:55 AM Page 11

DIMENSIONS

	D39EX-22		D39PX-22	
A	1280 mm	**4'2"**	1280 mm	**4'2"**
B	2710 mm	**8'11"**	3250 mm	**10'8"**
B*	—		2980 mm	**9'9"**
C	370 mm	**1'3"**	445 mm	**1'5"**
C*	—		405 mm	**1'4"**
D	2730 mm	**8'11"**	2730 mm	**8'11"**
E	900 mm	**2'11"**	900 mm	**2'11"**
F	450 mm	**1'6"**	450 mm	**1'6"**
G	2360 mm	**7'9"**	2360 mm	**7'9"**
H	4335 mm	**14'3"**	4335 mm	**14'3"**
I	2245 mm	**7'4"**	2245 mm	**7'4"**
J	3015 mm	**9'11"**	3015 mm	**9'11"**
K	2835 mm	**9'4"**	2835 mm	**9'4"**
L	53 mm	**2.1"**	53 mm	**2.1"**
M	1650 mm	**5'5"**	1790 mm	**5'10"**
N	460 mm	**1'6"**	635 mm	**2'1"**
O	2110 mm	**6'11"**	2425 mm	**7'11"**
P	2490 mm	**8'2"**	2980 mm	**9'9"**
P*	—		2750 mm	**9'0"**

* Narrow blade for D39PX-22

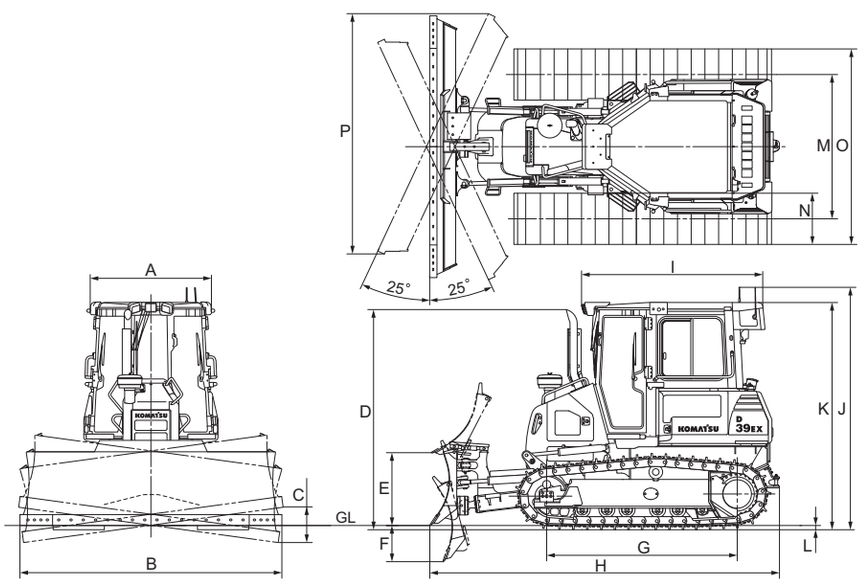

Ground clearance:
D39EX-22 . . . . . 385 mm **15.2"**
D39PX-22 . . . . . 385 mm **15.2"**

HYDRAULIC SYSTEM

Closed-center Load Sensing System (CLSS) designed for precise and responsive control and for efficient simultaneous operation.

Hydraulic control unit:
All spool control valves externally mounted remote to the hydraulic tank. Piston-type hydraulic pump with capacity (discharge flow) of 99 ltr/min **26.2 U.S. gal/min** at rated engine rpm.

Relief valve setting. . . . . 27.4 MPa, 280 kg/cm² **3,983 psi**

Hydraulic cylinders . . . . . Double-acting, piston type

	Number of cylinders	Bore	
Blade lift	2	75 mm	**2.95"**
Blade tilt	1	90 mm	**3.54"**
Blade angle	2	80 mm	**3.15"**
Blade pitch	1 adjustable linkage		

Hydraulic oil capacity (refilling):
Power angle tilt dozer . . . . . 60 ltr **15.9 U.S. gal**

Control valves:
3-spool control valve for power angle tilt dozer.
Positions:
Blade lift . . . . . Raise, hold, lower, and float
Blade tilt . . . . . Right, hold, and left
Blade angle . . . . . Right, hold, and left

Note: Includes one additional spool for fan control.

Additional control valve required for ripper.
Positions:
Ripper lift . . . . . Raise, hold and lower

DOZER EQUIPMENT

Use of high tensile strength steel in moldboard for strengthened blade construction.

	Overall Length With Dozer*	Blade Capacity (SAE)	Blade Width x Height	Maximum Lift Above Ground	Maximum Drop Below Ground	Maximum Tilt Adjustment	Blade Angle
D39EX-22 PAT Standard Blade	4335 mm **14'3"**	2.21 m³ **2.89 yd³**	2710 mm x 980 mm **8'11" x 3'3"**	900 mm **2'11"**	450 mm **1'6"**	370 mm **1'3"**	25°
D39PX-22 PAT Standard Blade	4335 mm **14'3"**	2.30 m³ **3.00 yd³**	3250 mm x 910 mm **10'8" x 3'0"**	900 mm **2'11"**	450 mm **1'6"**	440 mm **1'5"**	25°
D39PX-22 PAT Narrow Blade	4335 mm **14'3"**	2.08 m³ **2.72 yd³**	2980 mm x 910 mm **9'9" x 3'0"**	900 mm **2'11"**	450 mm **1'6"**	405 mm **1'4"**	25°

* Including hitch

STANDARD EQUIPMENT FOR BASE MACHINE

ENGINE AND RELATED ITEMS
- Air cleaner, dry, double element type with caution lamp on monitor
- Decelerator pedal
- Engine, KOMATSU SAA4D107E-1, net output of 79 kW **105 HP** direct injection, turbocharged, air-to-air aftercooler UN R96 (EPA Tier 3, EU Stage 3A equivalent).
- Fan, hydraulic driven, electronic control, reversible for cleaning
- Fuel pre-filter (10 micron) and fuel filter (2 micron)
- Grid heater
- Intake pipe with precleaner
- Radiator mask grid
- Radiator reserve tank
- Water separator

ELECTRIC SYSTEM
- Back-up alarm
- Batteries, large capacity 92 Ah
- Starting motor, 5.5 kW

POWER TRAIN AND CONTROLS
- Brake pedal
- Counter rotation
- Electronically controlled Hydrostatic Transmission (HST) with Quick-shift and variable speed settings
- Palm Command Control System (PCCS) with electronic control for travel control
- Reverse speed presets

UNDERCARRIAGE
- Idler
- Sprockets, bolt-on, solid type
- Track roller guards, end sections
- Track shoe assembly w/sealed and lubricated link assembly:
  —D39EX-22: 460 mm **18.1"** single grouser shoes
  —D39PX-22: 635 mm **25.0"** single grouser shoes

GUARDS AND COVERS
- Crankcase guard and underguard
- Engine hood and side panels
- ROPS/FOPS*
- Sprocket inner guard

OPERATOR ENVIRONMENT
- Seat, suspension type
- Electronic monitor panel with on-board diagnostics
- Foot rests, high mounted
- Horn
- Seat belt, 76 mm **3"** wide retractable

HYDRAULICS AND CONTROLS
- Accumulator for Proportional Pressure Control (PPC)
- Hydraulics for PAT dozer
- Palm Command Control System (PCCS) with Proportional Pressure Control (PPC) for blade control

VANDALISM PROTECTION
- Filler cap locks and cover locks

OTHER STANDARD EQUIPMENT
- Grease gun holder
- High altitude arrangement (no fuel adjustment up to 2300 m **7,546 ft**)
- KOMTRAX® function Level 2+
- Lighting package - (3 front, 1 rear cab)
- Marks and plates, English
- Pullhook, front

* ROPS cab must be ordered for all machines. Cab and canopy FOPS Level 2. ROPS/FOPS meets all OSHA/MSHA standards and regulations criteria.

Dozer assembly and rear-mounted equipment are not included in base machine price.

OPTIONAL EQUIPMENT

TRACK SHOE ASSEMBLY WITH SEALED AND LUBRICATED LINK ASSEMBLY
- D39EX-22
  – 510 mm **20"** single grouser

TRACK RAIL ASSEMBLY WITH ABRASION RESISTANT (AR) BUSHINGS AND SEALED AND LUBRICATED LINK ASSEMBLY
- D39EX-22
  – 460 mm **18.1"** single grouser
- D39PX-22
  – 635 mm **25.0"** single grouser, AR link with AR bushings

DOZER ASSEMBLY
- Variable pitch, power angle tilt dozer assembly, inside arms
  EX: 2710 mm **8' 11"** width blade
  PX: 2980 mm **9' 9"** width narrow blade
  PX: 3250 mm **10' 8"** width blade

TRACK ROLLER GUARDS
- Track roller guards, full length

HITCH
- Standard type

ELECTRIC SYSTEM
- Alternator, 60 amp (24 V)

REAR EQUIPMENT AND HYDRAULICS
- Ripper, multi-shank (D39EX-22 only)
- Rear, hydraulics
- Winch

ROPS CAB
- ROPS cab (includes air conditioner with heater, defroster, pressurizer, cup holder, lunchbox holder, radio, AM/FM, cassette, cigarette lighter (24 V), 12 amp (12 V) power port)
- Seat, suspension type, fabric

OPERATOR ENVIRONMENT
- Forestry guards for cab
- Topcon® Plug-N-Play
- Trimble® Ready

AESS769-04 ©2012 Komatsu America Corp. Printed in USA AD06(1.5M)C 06/12 (EV-1)

KOMATSU®

www.KomatsuAmerica.com

Komatsu America Corp. is an authorized licensee of Komatsu Ltd.
Materials and specifications are subject to change without notice
KOMATSU® and KOMTRAX® are registered trademarks of Komatsu Ltd., Japan